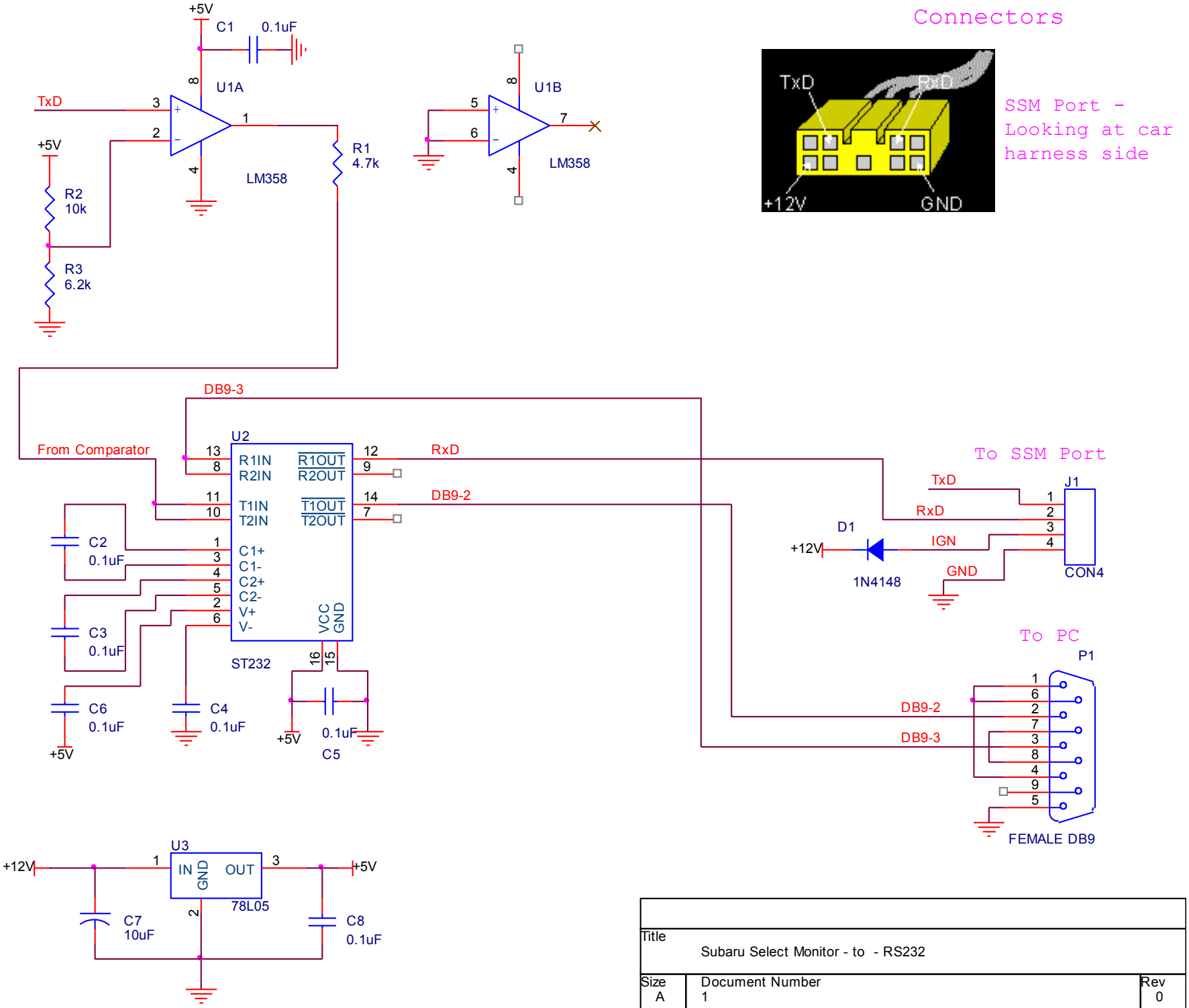

Title	Subaru Select Monitor - to - RS232	
Size A	Document Number 1	Rev 0
Date: Wednesday, August 22, 2007	Sheet 1 of 1	